PRESSURE RELIEF VALVES

The OTECO Pressure Relief Valve offers a low cost protection for slush pumps, manifolds and other expensive equipment. Our product line offers a multitude of choices and connections for any application. Our high quality OTECO shear pins offer great accuracy and repeatability.

10 DNV Type Approved models to choose from.

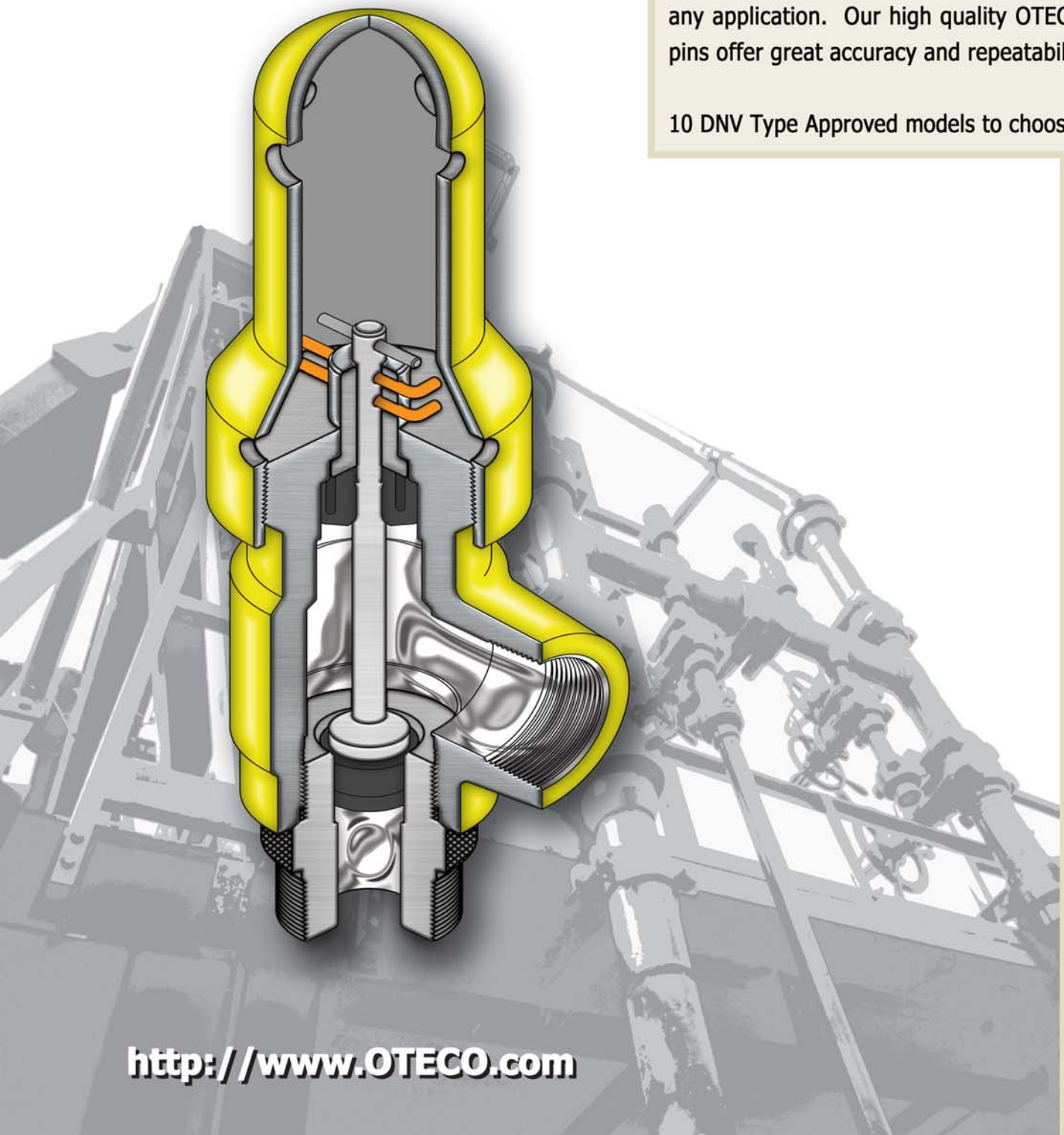

http://www.OTECO.com

CELEBRATING 65 YEARS

PRESSURE RELIEF VALVE GENERAL INFO

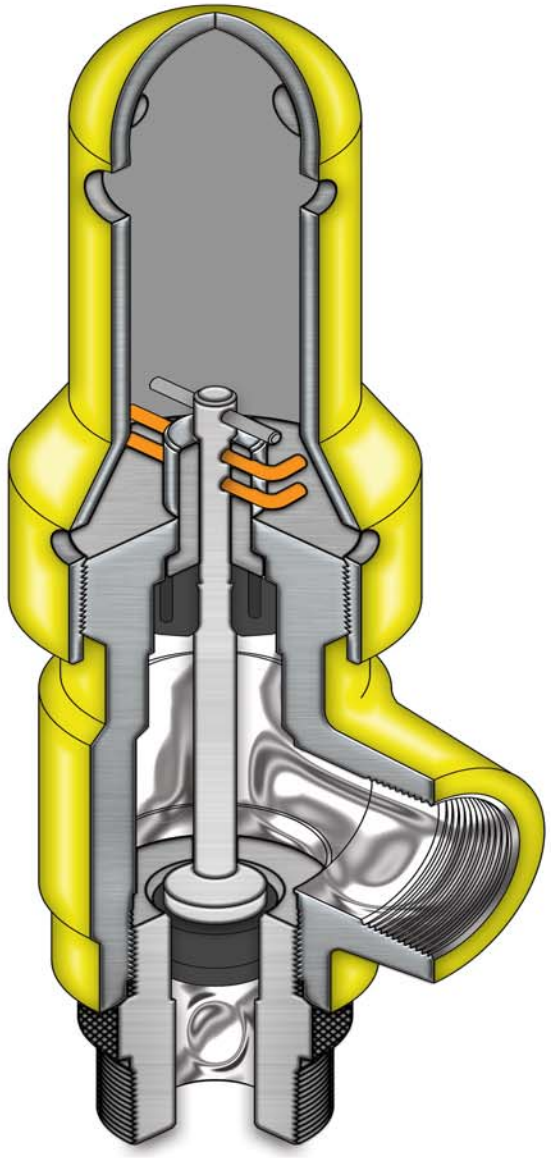

- Overpressures are relieved by the shearing of custom ground Oteco Shear Pins.
- All components manufactured in our Houston, Texas, USA facility ensuring quality parts for operation and repair.
- Hardened stainless steel stems and liner subs offer improved corrosion and erosion resistance for longer product life.
- Weco® valves have modified thread safety covers that remove easily for setting and resetting the valve.
- Forged bodies provide greater strength over competitors castings.
- Integral FMC Weco® Hammer Union end connections.
- Low cost operation and repair.
- 10 DNV Type Approved models.

Size	Pressure Range PSI	(Bar)	OTECO Part #	DNV Approved	Description	Weight Lbs.	(kg)
2"	125-500	(8.6-34.5)	132005		20015,2" L.P.T. Inlet X 1-1/2" L.P.T. Outlet	23.5	(10.7)
2"	250-1,000	(17.2-68.9)	132010		20210,2" L.P.T. Inlet X 1-1/2" L.P.T. Outlet	23.5	(10.7)
2"	500-1,250	(34.5-86.2)	132013		20513,2" L.P.T. Inlet & Outlet	26.1	(11.8)
2"	500-1,250	(34.5-86.2)	132057	DNV	20513,2" Fig.1502 Female Inlet X Male Outlet	45.0	(20.4)
2"	1,000-2,500	(68.9-189.6)	132027		21027,2" L.P.T. Inlet & Outlet	26.5	(12.0)
2"	1,000-2,500	(68.9-189.6)	132056	DNV	21027,2" Fig.1502 Female Inlet X Male Outlet	45.4	(20.6)
2"	1,000-5,000	(68.9-344.7)	132050		21050,2" L.P.T. Inlet & Outlet	26.6	(12.1)
2"	1,000-5,000	(68.9-344.7)	132055	DNV	21050,2" Fig.1502 Female Inlet X Male Outlet	45.5	(20.6)
2"	6,300-10,000	(434.4-689.5)	132100		26010,2" L.P.T. Inlet & Outlet	25.5	(11.6)
2"	6,300-10,000	(434.4-689.5)	132059		26010,2" Fig.1502 Female Inlet X Male Outlet	44.4	(20.1)
3"	500-2,500	(34.5-172.4)	133025		30525,3" L.P.T. Inlet & Outlet	70.0	(31.8)
3"	500-2,500	(34.5-172.4)	133056	DNV	30525,3" Fig.1502 Female Inlet X Male Outlet	121.0	(54.9)
3"	1,000-5,000	(34.5-344.7)	133050		30550,3" L.P.T. Inlet & Outlet	71.5	(32.4)
3"	1,000-5,000	(34.5-344.7)	133055	DNV	30550,3" Fig.1502 Female Inlet X Male Outlet	121.0	(54.9)

Weco® is a federally registered trademark by FMC Technologies.

PRESSURE RELIEF VALVE RANGE CHART

Oteco Pressure Relief Valves operate using our high quality Oteco Shear Pins. Precision ground, destructively tested throughout the manufacturing process, our shear pins offer the best accuracy and range on the market. Competitors that use nails cannot offer accurate pressure ranges.

OTECO®

PRESSURE RELIEF VALVE PART NO. 30550

SERIAL NO.

5000 PSI MAX. WORKING PRESSURE 250 DEG F MAX. TEMPERATURE

WARNING: INSTALLATION, OPERATION, AND MAINTENANCE OF THIS VALVE MUST BE IN ACCORDANCE WITH OTECO ENGINEERING BULLETINS EB-001, EB-002, & EB-003. COPIES OF THESE BULLETINS MAY BE OBTAINED BY CALLING COLLECT 713-695-3693.

SHEAR PIN NO.		60	50	45	40	30	20	16
SHEAR PIN COLOR		ORANGE	BLACK	SILVER	GREEN	GREY	RED	BLUE
NOMINAL RELIEF PRESSURE, PSI	(1 PIN)	2,500	2,250	2,000	1,750	1,500	1,250	1,000
	(2 PINS)	5,000	4,500	4,000	3,500	3,000	2,500	2,000

OTECO, INC. – P.O. BOX 1849 – HOUSTON, TEXAS USA 77251

Part #	Description
140503	PRV,SHEAR PIN,#3,BROWN
140504	PRV,SHEAR PIN,#4,PINK
140506	PRV,SHEAR PIN,#6,YELLOW
140508	PRV,SHEAR PIN,#8,PURPLE
140512	PRV,SHEAR PIN,#12,WHITE
140516	PRV,SHEAR PIN,#16,BLUE
140520	PRV,SHEAR PIN,#20,RED
140530	PRV,SHEAR PIN,#30,GRAY
140540	PRV,SHEAR PIN,#40,GREEN
140545	PRV,SHEAR PIN,#45,SILVER
140550	PRV,SHEAR PIN,#50,BLACK
140560	PRV,SHEAR PIN,#60,ORANGE

PINS ARE SOLD IN QUANTITY OF 10.

LOW PRESSURE - NOMINAL RELIEF PRESSURE SETTINGS

		SHEAR PIN #	3	4	6	8	12	16
		SHEAR PIN COLOR	BROWN	PINK	YELLOW	PURPLE	WHITE	BLUE
2" PRV-20015	1 PIN	PSI	125	200	250	300	425	500
		(Bar)	(8.6)	(13.8)	(17.2)	(20.7)	(29.3)	(34.5)
2" PRV-20210	1 PIN	PSI	250	400	500	600	850	1,000
		(Bar)	(17.2)	(27.6)	(34.5)	(41.4)	(58.6)	(68.9)

HIGH PRESSURE - NOMINAL RELIEF PRESSURE SETTINGS

		SHEAR PIN #	16	20	30	40	45	50	60
		SHEAR PIN COLOR	BLUE	RED	GREY	GREEN	SILVER	BLACK	ORANGE
2" PRV-20513	1 PIN	PSI	500	625	750	875	1,000	1,125	1,250
		(Bar)	(34.5)	(43.1)	(51.7)	(60.3)	(68.9)	(77.6)	(86.2)
2" PRV-21027	1 PIN	PSI	1,000	1,250	1,500	1,750	2,000	2,250	2,500
		(Bar)	(68.9)	(86.2)	(103.4)	(120.7)	(137.9)	(155.1)	(172.4)
2" PRV-21050	1 PIN	PSI	1,000	1,250	1,500	1,750	2,000	2,250	2,500
		(Bar)	(68.9)	(86.2)	(103.4)	(120.7)	(137.9)	(155.1)	(172.4)
	2 PINS	PSI	2,000	2,500	3,000	3,500	4,000	4,500	5,000
		(Bar)	(137.9)	(172.4)	(206.8)	(241.3)	(275.8)	(310.3)	(344.7)
2" PRV-26010	1 PIN	PSI	6,200	8,600	10,000	NA	NA	NA	NA
		(Bar)	(427.5)	(592.9)	(689.5)	NA	NA	NA	NA
3" PRV-30525	1 PIN	PSI	500	625	750	875	1,000	1,125	1,250
		(Bar)	(34.5)	(43.1)	(51.7)	(60.3)	(68.9)	(77.6)	(86.2)
	2 PINS	PSI	1,000	1,250	1,500	1,750	2,000	2,250	2,500
		(Bar)	(68.9)	(86.2)	(103.4)	(120.7)	(137.9)	(155.1)	(172.4)
3" PRV-30550	1 PIN	PSI	1,000	1,250	1,500	1,750	2,000	2,250	2,500
		(Bar)	(68.9)	(86.2)	(103.4)	(120.7)	(137.9)	(155.1)	(172.4)
	2 PINS	PSI	2,000	2,500	3,000	3,500	4,000	4,500	5,000
		(Bar)	(137.9)	(172.4)	(206.8)	(241.3)	(275.8)	(310.3)	(344.7)

2” 125-1,000 PSI PRESSURE RELIEF VALVES

PRV MODEL	Pressure Range PSI	(Bar)
20015	125-500	(8.6-34.5)
20210	250-1,000	(17.2-68.9)

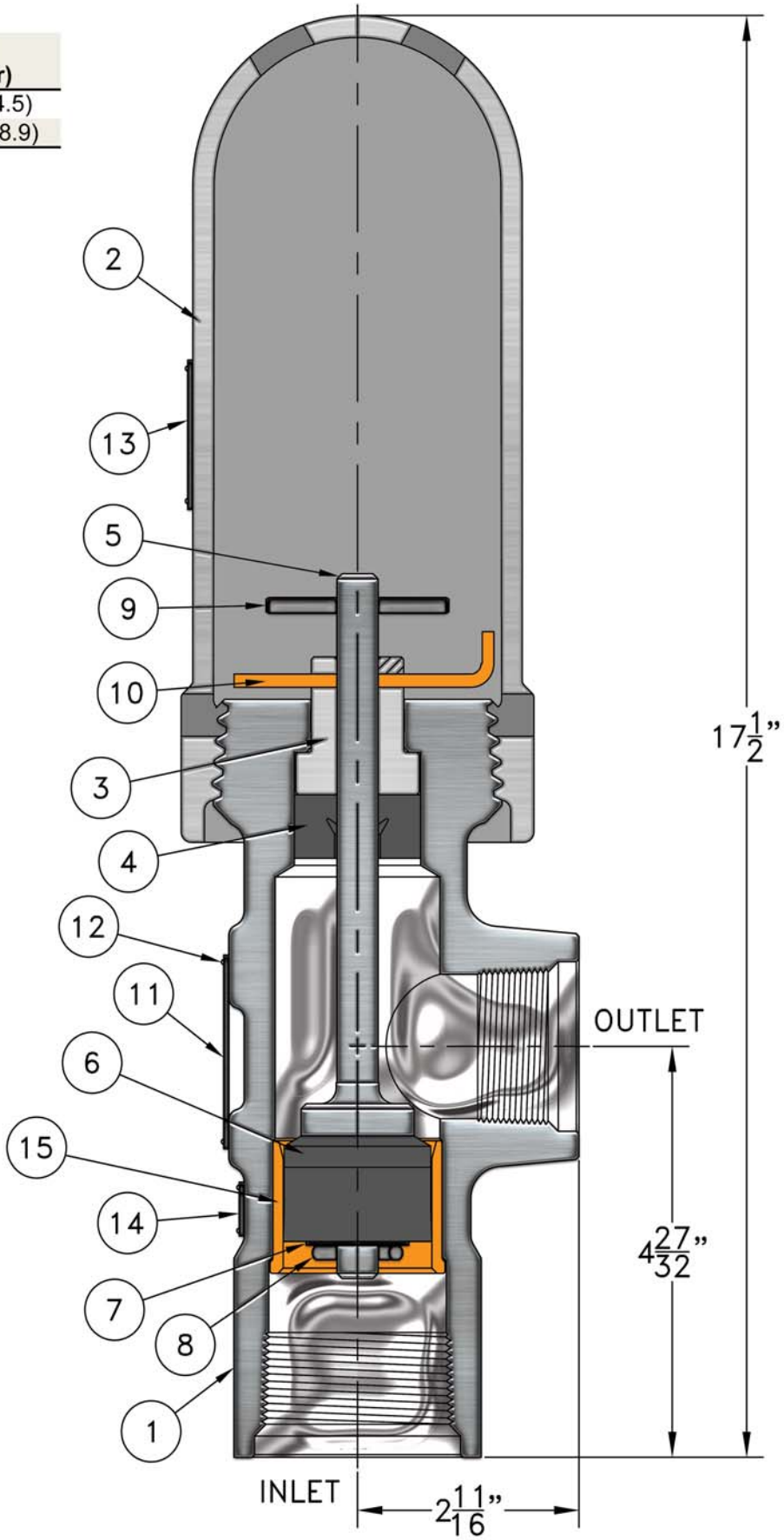

ITEM NO.	DESCRIPTION	OTECO PART NO.	WEIGHT Lbs.	(kg)
1	BODY with 2"LPT INLET X 1-1/2" OUTLET, VB2110	140121	12	(5.44)
2	SAFETY COVER, STC2125	141125	9	(4.08)
3	SINGLE SHEAR BUSHING, BU2150, MODEL 20015 ONLY	141421	0.5	(0.23)
	DOUBLE SHEAR BUSHING, BU2210, MODEL 20210 ONLY	141422	0.5	(0.23)
4	STEM CUSHION, SC4022, (NBR) NITRILE	140322	0.5	(0.23)
	STEM CUSHION, SC4022, (ECO) HYDRIN	140007	0.5	(0.23)
5	STEM, SS4022 (INCLUDES ITEM 9)	141221	1	(0.45)
6	PISTON KIT, SP4710, (ECO) HYDRIN, (INCLUDES ITEM 7 & 8)	140016	0.5	(0.23)
	PISTON KIT, SP4710, (NBR) NITRILE, (INCLUDES ITEM 7 & 8)	141025	0.5	(0.23)
7	WASHER 1/2", CADMIUM PLATED	301590	0.1	(0.05)
8	COTTER PIN, 3/16" X 1"	301591	0.1	(0.05)
9	STEM PIN	140935	0.1	(0.05)
10	SHEAR PINS #3 THROUGH #16	SEE PAGE 3		
11	NAME PLATE, MODEL 20015	140635	0.1	(0.05)
	NAME PLATE, MODEL 20210	140000	0.1	(0.05)
12	SCREW FASTENER, #2	301592	0.1	(0.05)
13	BONNET WARNING PLATE	140637	0.1	(0.05)
14	EXHAUST WARNING PLATE	140636	0.1	(0.05)
15	LINER BUSHING, LB211	140023	0.5	(0.23)
	MINOR REPAIR KIT (ITEMS 4 & 6) NITRILE, 20015, 20210	140210	0.5	(0.23)
	MAJOR REPAIR KIT (ITEMS 4, 5 & 6) NITRILE, 200015, 20210	140211	1	(0.45)

2” 500-5,000 PSI PRESSURE RELIEF VALVES

PRV MODEL	Pressure Range PSI	(Bar)
20513	500-1,250	(34.5-86.2)
21027	1,000-2,500	(68.9-189.6)
21050	1,000-5,000	(68.9-344.7)

CONNECTION	"A"	"B"	"C"
L.P.T.	2-9/16"	5-7/8"	18"
WECO	6-7/16"	6-1/2"	18-5/8"

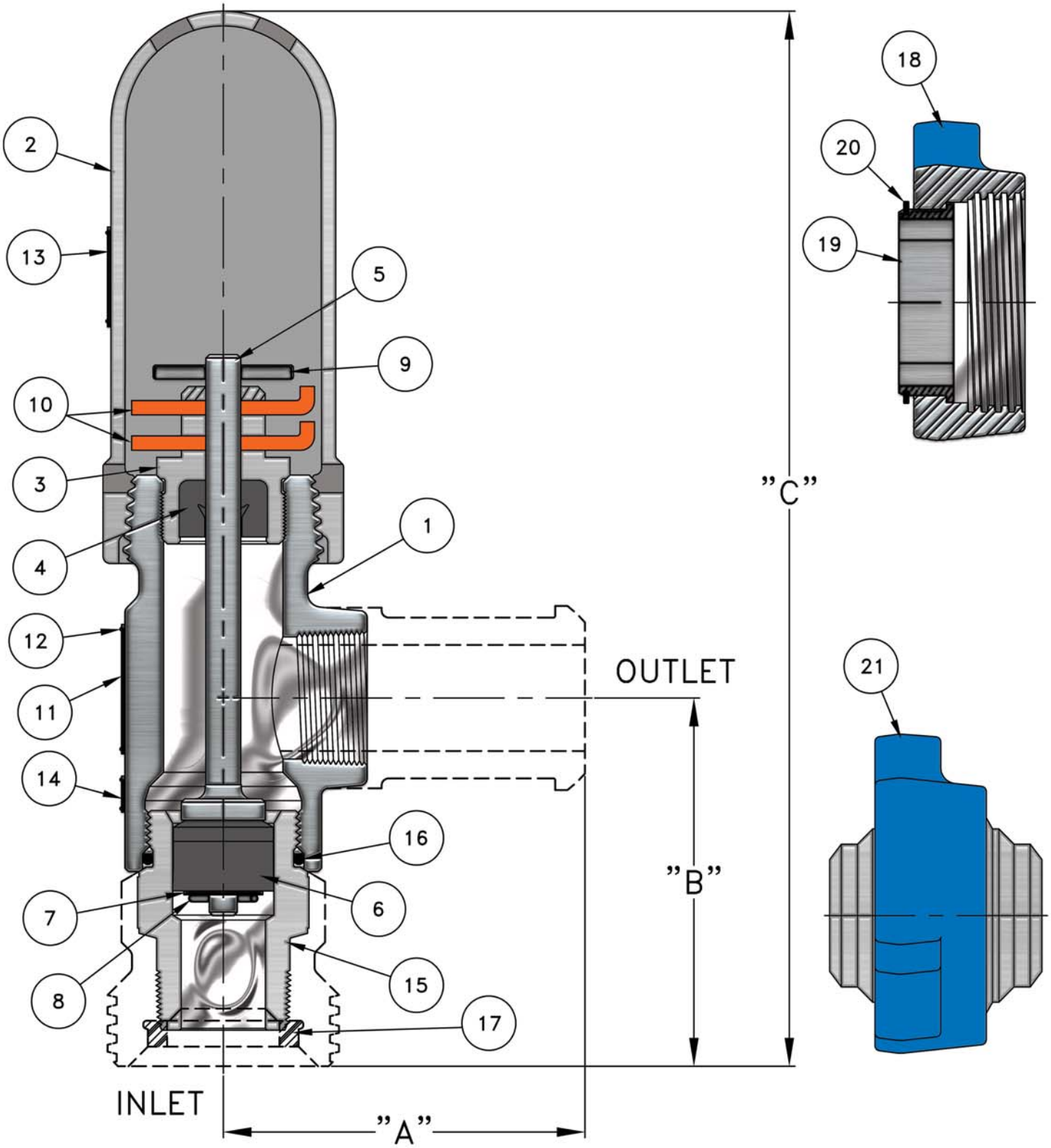

ITEM NO.	DESCRIPTION	OTECO PART NO.	WEIGHT Lbs.	(kg)
1	BODY with 2" LPT FEMALE OUTLET, VB2550, STANDARD	140125	10.7	(4.85)
	BODY with 2" FIGURE 1502 MALE OUTLET, WECO	140131	15.5	(7.03)
2	SAFETY COVER, STC2125, STANDARD	141125	9	(4.08)
	SAFETY COVER, STC2125, WECO	141122	9	(4.08)
3	SINGLE SHEAR BONNET, BO2514, MODEL 20513, STANDARD	140213	2.3	(1.04)
	SINGLE SHEAR BONNET, BO2514, MODEL 20513, DNV, WECO	140223	2.3	(1.04)
	SINGLE SHEAR BONNET, BO2127, MODEL 21027, STANDARD	140217	2.3	(1.04)
	SINGLE SHEAR BONNET, BO2127, MODEL 21027, DNV, WECO	140224	2.3	(1.04)
	DOUBLE SHEAR BONNET, BO2150, MODEL 21050, STANDARD	140215	2.3	(1.04)
	DOUBLE SHEAR BONNET, BO2150, MODEL 21050, DNV, WECO	140225	2.3	(1.04)
4	STEM CUSHION, SC4110, (NBR) NITRILE, STANDARD	140325	0.5	(0.23)
	STEM CUSHION, SC4110, (ECO) HYDRIN	140008	0.5	(0.23)
	STEM CUSHION, SC4110, (VIT) VITON	140012	0.5	(0.23)
5	STEM, SS4104, MODELS 20513 & 21027, (INCLUDES ITEM 9)	141224	1	(0.45)
	STEM, SS4030, MODEL 21050, (INCLUDES ITEM 9)	141225	1	(0.45)
6	PISTON KIT, SP4710, (NBR) NITRILE, STANDARD, (INCLUDES ITEM 7 & 8)	141025	0.5	(0.23)
	PISTON KIT, SP4710, (ECO) HYDRIN, (INCLUDES ITEM 7 & 8)	140016	0.5	(0.23)
7	WASHER 1/2", CADMIUM PLATED	301590	0.1	(0.05)
8	COTTER PIN, 3/16" X 1"	301591	0.1	(0.05)
9	STEM PIN	140015	0.1	(0.05)
10	SHEAR PINS #16 THROUGH #60	SEE PAGE 3		
11	NAME PLATE, MODEL 20513	140001	0.1	(0.05)
	NAME PLATE, MODEL 21027	140002	0.1	(0.05)
	NAME PLATE, MODEL 21050	140003	0.1	(0.05)
12	SCREW FASTENER, #2	301592	0.1	(0.05)
13	BONNET WARNING PLATE	140637	0.1	(0.05)
14	EXHAUST WARNING PLATE	140636	0.1	(0.05)
15	LINER SUB, LS255, 2" LPT MALE INLET, STANDARD	140425	3.7	(1.68)
	LINER SUB, 2" FIGURE 1502 FEMALE INLET, WECO	140437	7.9	(3.58)
16	"O"-RING, #333 70 DURO, (NBR) NITRILE	140725	0.1	(0.05)
17	2" FMC UNION SEAL RING 602/1002/1502, (NBR) NITRILE, STANDARD	301921	0.1	(0.05)
	2" FMC UNION SEAL RING 602/1002/1502, (VIT) VITON	302062	0.1	(0.05)
	FMC DETACHABLE NUT ASSEMBLY			
18	2" FIGURE 1502 UNION NUT, STANDARD/DETACHABLE, STANDARD, DNV	302626	6	(2.7)
	2" FIGURE 1502 UNION NUT, STANDARD/DETACHABLE, SOUR GAS, CHARPY	302071	6	(2.7)
19	2" FIGURE 1502 UNION NUT, RETAINER RING SEGMENTS, STANDARD, DNV	302627	0.5	(0.23)
	2" FIGURE 1502 UNION NUT, RETAINER RING SEGMENTS, SOUR GAS	302517	0.5	(0.23)
20	2" FIGURE 1502 UNION NUT, RETAINER SNAP RING, ALL ASSEMBLIES	301924	0.1	(0.05)
	FMC UNION WELDOLET ASSEMBLY (INCLUDED WITH SPECIAL PRV ASSEMBLY)			
21	2" FIGURE 1502 with 2" BUTT WELD SCH.XXS, STANDARD, DNV	302037	12	(5.4)
	MINOR REPAIR KIT (ITEMS 4, 6 & 16) NITRILE, 20513, 21027, 21050	140250	0.5	(0.23)
	MAJOR REPAIR KIT (ITEMS 4, 5, 6 & 16) NITRILE, 20513, 21027	140271	1	(0.45)
	MAJOR REPAIR KIT (ITEMS 4, 5, 6 & 16) NITRILE, 21050	140251	1	(0.45)

2” 6,300-10,000 PSI PRESSURE RELIEF VALVES

PRV MODEL	Pressure Range PSI	(Bar)
26010	6,300-10,000	(434.4-689.5)

CONNECTION	"A"	"B"	"C"
L.P.T.	2-9/16"	5-3/4"	14-1/4"
WECO	6-7/16"	6-9/16"	15-1/16"

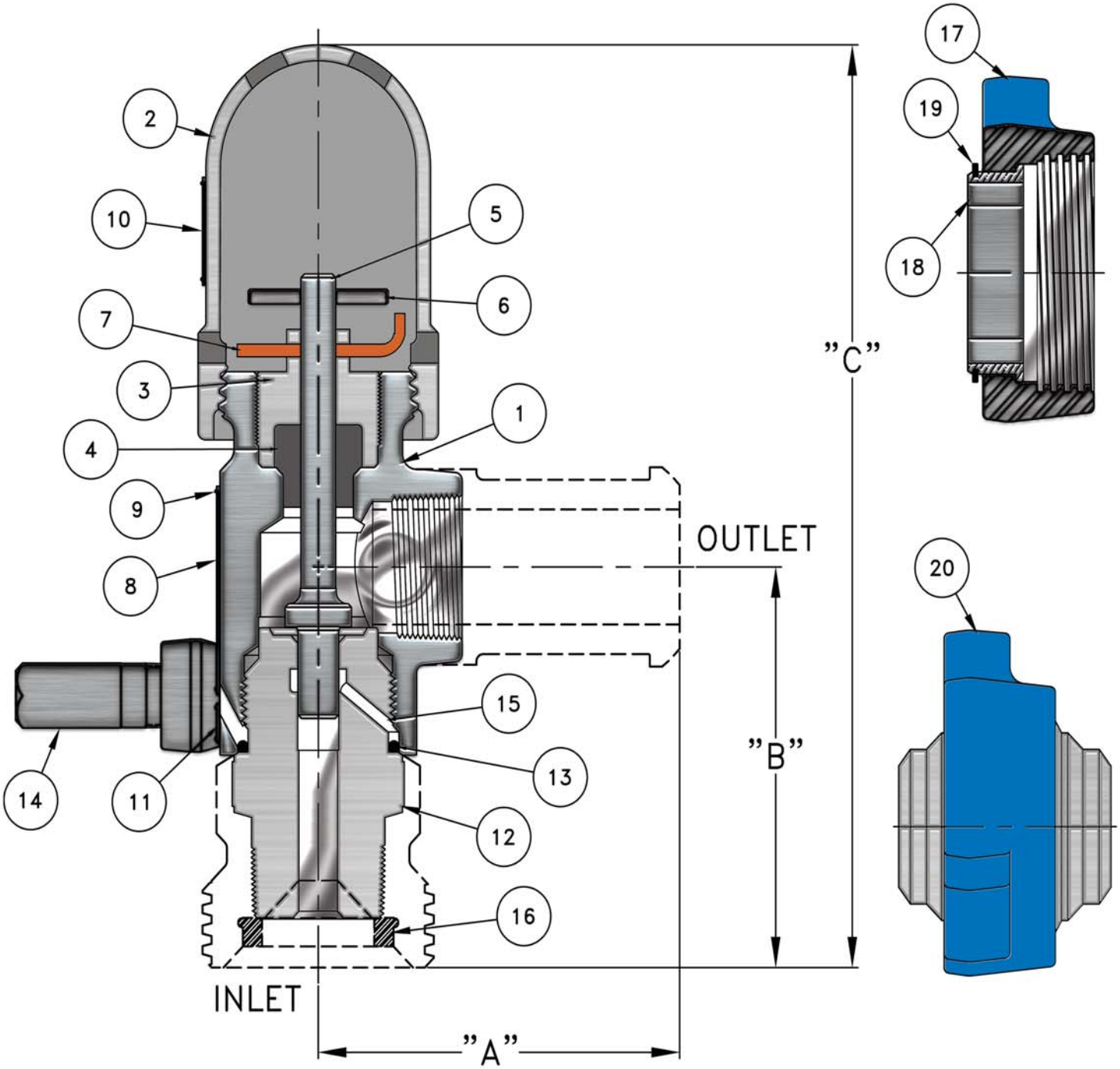

ITEM NO.	DESCRIPTION	OTECO PART NO.	WEIGHT Lbs.	(kg)
1	BODY with 2" LPT FEMALE OUTLET, VB2610, STANDARD	140126	11.6	(5.26)
	BODY with 2" FIGURE 1502 MALE OUTLET, WECO	140124	16.4	(7.44)
2	SAFETY COVER, STC2610, STANDARD & WECO	141102	5.9	(2.68)
3	SINGLE SHEAR BONNET, BO2610, STANDARD & WECO	140226	1.6	(0.73)
4	STEM CUSHION, SC4120, (NBR) NITRILE	140326	0.5	(0.23)
5	STEM, SS4122, (INLUDES ITEM 6)	141226	1	(0.45)
6	STEM PIN	140015	0.1	(0.05)
7	SHEAR PINS #16, #20, #30	SEE PAGE 3		
8	NAME PLATE, MODEL 2610	140004	0.1	(0.05)
9	SCREW FASTENER, #2	301592	0.1	(0.05)
10	BONNET WARNING PLATE	140637	0.1	(0.05)
11	EXHAUST WARNING PLATE	140636	0.1	(0.05)
12	LINER SUB, LS2610, 2" LPT MALE INLET, STANDARD	140426	6.5	(2.95)
	LINER SUB, 2" FIGURE 1502 FEMALE INLET, WECO	140427	10.6	(4.81)
13	"O"-RING, #333 90 DURO, (NBR) NITRILE	140726	0.1	(0.05)
14	PACKING GUN, PG2610	141626	1	(0.45)
15	PACKING, STICK	141627	0.5	(0.23)
16	2" FMC UNION SEAL RING 602/1002/1502, (NBR) NITRILE, STANDARD	301921	0.1	(0.05)
	2" FMC UNION SEAL RING 602/1002/1502, (VIT) VITON	302062	0.1	(0.05)
	FMC DETACHABLE NUT ASSEMBLY			
17	2" FIGURE 1502 UNION NUT, STANDARD/DETACHABLE, STANDARD, DNV	302626	6	(2.7)
	2" FIGURE 1502 UNION NUT, STANDARD/DETACHABLE, SOUR GAS, CHARPY	302071	6	(2.7)
18	2" FIGURE 1502 UNION NUT, RETAINER RING SEGMENTS, STANDARD, DNV	302627	0.5	(0.23)
	2" FIGURE 1502 UNION NUT, RETAINER RING SEGMENTS, SOUR GAS	302517	0.5	(0.23)
19	2" FIGURE 1502 UNION NUT, RETAINER SNAP RING, ALL ASSEMBLIES	301924	0.1	(0.05)
	FMC UNION WELDOLET ASSEMBLY (INCLUDED WITH SPECIAL PRV ASSEMBLY)			
20	2" FIGURE 1502 with 2" BUTT WELD SCH.XXS, STANDARD, DNV	302037	12	(5.4)
	MINOR REPAIR KIT (ITEMS 4, 13 & 15) NITRILE, 26010	140260	0.5	(0.23)
	MAJOR REPAIR KIT (ITEMS 4, 5, 13 & 15) NITRILE, 26010	140261	1	(0.45)

3” 500-5,000 PSI PRESSURE RELIEF VALVES

PRV MODEL	Pressure Range PSI	(Bar)
30525	500-2,500	(34.5-172.4)
30550	5,000-5,000	(34.5-344.7)

CONNECTION	"A"	"B"	"C"
L.P.T.	4-1/2	7-1/4	24
WECO	8-7/8	7-7/8	24-5/8

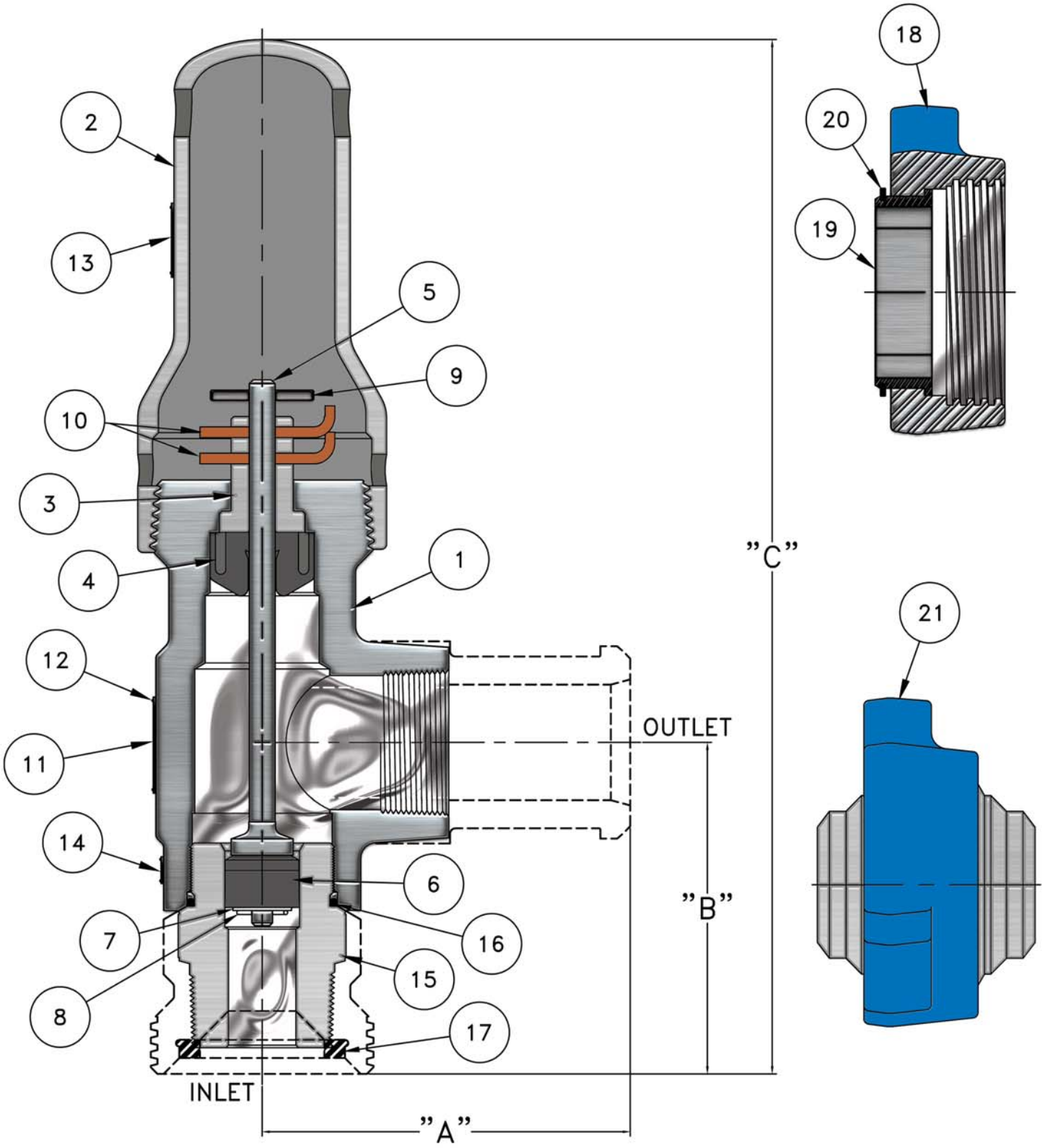

ITEM NO.	DESCRIPTION	OTECO PART NO.	WEIGHT Lbs.	(kg)
1	BODY with 3" LPT FEMALE OUTLET, VB3550, STANDARD	140135	40	(18.1)
	BODY with 3" FIGURE 1502 MALE OUTLET, WECO	140152	52	(23.6)
2	SAFETY COVER, STC3505, STANDARD	141135	16.9	(7.67)
	SAFETY COVER, STC3505, WECO	141133	16.9	(7.67)
3	DOUBLE SHEAR BUSHING, BU3535, MODEL 30525 & 30550	141435	1.5	(0.68)
4	STEM CUSHION, SC6110, (NBR) NITRILE, STANDARD	140335	0.5	(0.23)
	STEM CUSHION, SC6110, (ECO) HYDRIN	140010	0.5	(0.23)
	STEM CUSHION, SC6110, (VIT) VITON	140014	0.5	(0.23)
5	(INLUDES ITEM 9)			
	STEM, SS6106, MODEL 30525	141232	1	(0.45)
	STEM, SS6110, MODEL 30550	141235	1	(0.45)
6	(INLCUDES ITEM 7 & 8)			
	PISTON KIT, SP6110, (NBR) NITRILE, MODEL 30525, STANDARD	141032	0.5	(0.23)
	PISTON KIT, SP6110, (ECO) HYDRIN, MODEL 30525	140017	0.5	(0.23)
	PISTON KIT, SP4710, (NBR) NITRILE, MODEL 30550, STANDARD	141025	0.5	(0.23)
	PISTON KIT, SP4710, (ECO) HYDRIN, MODEL 30550	140016	0.5	(0.23)
7	WASHER 1/2", CADMIUM PLATED	301590	0.1	(0.05)
8	COTTER PIN, 3/16" X 1"	301591	0.1	(0.05)
9	STEM PIN	140015	0.1	(0.05)
10	SHEAR PINS #16 THROUGH #60	SEE PAGE 3		
11	NAME PLATE, MODEL 30525	140005	0.1	(0.05)
	NAME PLATE, MODEL 30550	140006	0.1	(0.05)
12	SCREW FASTENER, #2	301592	0.1	(0.05)
13	BONNET WARNING PLATE	140637	0.1	(0.05)
14	EXHAUST WARNING PLATE	140636	0.1	(0.05)
15	LINER SUB, LS353, 3" LPT MALE INLET, MODEL 30525, STANDARD	140432	11.3	(5.13)
	LINER SUB, 3" FIGURE 1502 FEMALE INLET, MODEL 30525, WECO	140433	14.3	(6.49)
	LINER SUB, LS355, 3" LPT MALE INLET, MODEL 30550, STANDARD	140435	10.7	(4.85)
	LINER SUB, 3" FIGURE 1502 FEMALE INLET, MODEL 30550, WECO	140436	17	(7.71)
16	"O"-RING, #333 70 DURO, (NBR) NITRILE	140735	0.1	(0.05)
17	3" FMC UNION SEAL RING 602/1002/1502, (NBR) NITRILE, STANDARD	301862	0.1	(.05)
	3" FMC UNION SEAL RING 602/1002/1502, (VIT) VITON	302542	0.1	(.05)
	FMC DETACHABLE NUT ASSEMBLY			
18	3" FIGURE 1502 UNION NUT, STANDARD/DETACHABLE, STANDARD, DNV	302625	12	(5.4)
	3" FIGURE 1502 UNION NUT, STANDARD/DETACHABLE, SOUR GAS, CHARPY	302540	12	(5.4)
19	3" FIGURE 1502 UNION NUT, RETAINER RING SEGMENTS, STANDARD, DNV	302628	0.5	(0.23)
	3" FIGURE 1502 UNION NUT, RETAINER RING SEGMENTS, SOUR GAS	302541	0.5	(0.23)
20	3" FIGURE 1502 UNION NUT, RETAINER SNAP RING, ALL ASSEMBLIES	301515	0.1	(.05)
	FMC UNION WELDOLET ASSEMBLY (INCLUDED WITH SPECIAL PRV ASSEMBLY)			
21	3" FIGURE 1502 with 3" BUTT WELD SCH.XXS, STANDARD, DNV	302036	25	(11.3)
	MINOR REPAIR KIT (ITEMS 4, 6 & 16) NITRILE, 30525	140320	0.5	(0.23)
	MAJOR REPAIR KIT (ITEMS 4, 5, 6 & 16) NITRILE, 30525	140321	1	(0.45)
	MINOR REPAIR KIT (ITEMS 4, 6 & 16) NITRILE, 30550	140350	0.5	(0.23)
	MAJOR REPAIR KIT (ITEMS 4, 5, 6 & 16) NITRILE, 30550	140351	1	(0.45)

Made in USA

For over 65 years OTECO, Inc. has been providing high quality oilfield equipment to the worldwide oil and gas markets.

Operating from our modern 120,000 square foot manufacturing facility in Houston, Texas, OTECO continues to provide products to the high quality standards for which we are known.

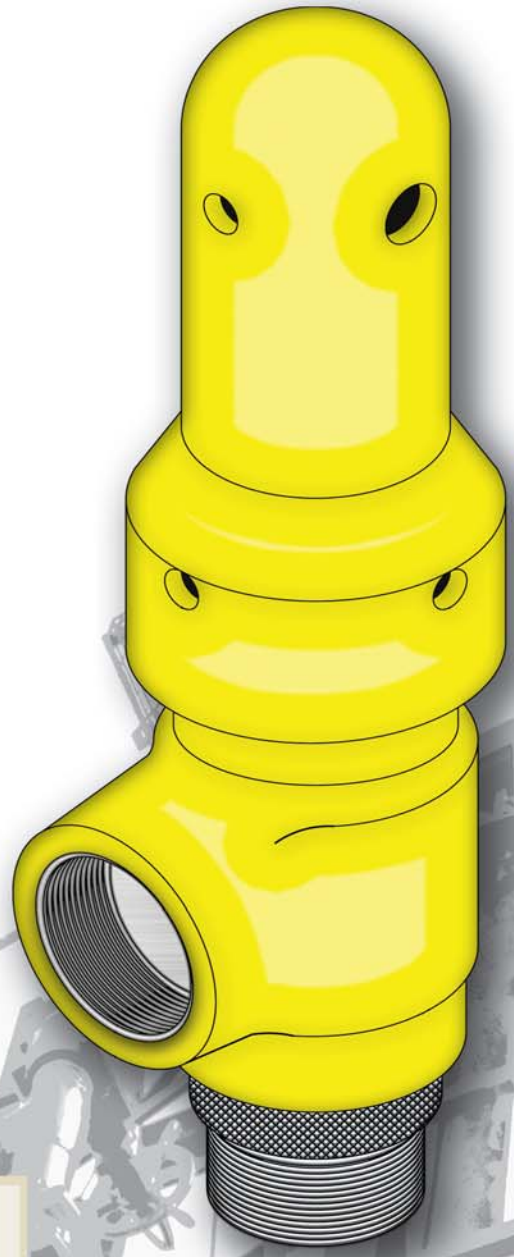

OTECO, Inc.

2828 Trout St.
Houston, Texas 77093-5546

Phone: 713-695-3693
Fax: 713-695-3520
Web Address: http://www.OTECO.com
E-mail: Sales@OTECO.com

MMXIII